Proton Improvement Plan-II

Steve Holmes, on behalf of the PIP-II Team

Fermilab Users Meeting

June 11, 2014

Program Goals

Our goal is to construct & operate the foremost facility in the world for particle physics research utilizing intense beams.

- Neutrinos
  - MINOS+, NOvA @700 kW
  - LBNF @ >1-2 MW
  - SBN @ 10's kW
- Muons
  - Muon g-2 @ 17-25 kW
  - Mu2e @ 8-100 kW
- Longer term opportunities

⇒ ***This requires more protons!***

Physics Opportunities

- LBNF
  - 1.2 MW of beam power on day one; 2.4 MW ultimately
  - Flexible proton beam energy (60-120 GeV)
- NuMI
  - 1.2 MW beam power in the interim
- Mu2e
  - 30-50% increase in beam power immediately*
  - Potential for ~25-100 kW at 800 MeV
    - Current Mu2e configuration limits to 25-30 kW
- SBN
  - 30-50% increase in beam power immediately*

* Possible extension of Booster operations to 20 Hz is under consideration, but not incorporated into these estimates

PIP-II Goals

Proton Improvement Plan-II supports these long term physics research goals while providing a platform for the future

Design Criteria

- Deliver 1.2 MW of beam power at 120 GeV, with power approaching 1 MW at energies down to 60 GeV, at the start of LBNF operations
- Support the current 8 GeV program, including Mu2e, g-2, and the suite of short-baseline neutrino experiments
- Provide upgrade path for Mu2e
- Provide a platform for extension of beam power to LBNF to >2 MW
- Provide a platform for extension of capability to high duty factor/higher beam power operations
- At an affordable cost to DOE

PIP/PIP-II Strategy

- Increase Booster beam repetition rate to 15 Hz (PIP)
  - 700 kW to NOvA concurrent with 8 GeV program
- Increase Booster/Main Injector per pulse intensity by 50%; decrease MI cycle time modestly
  - Increase Booster injection energy to ~800 MeV
  - Modest modifications to Booster/ Recycler/MI
    - To accommodate higher intensities and higher Booster injection energy

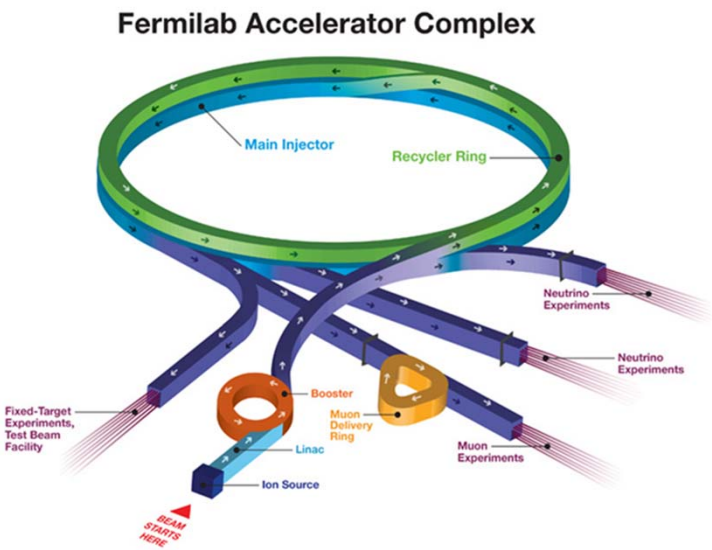

PIP-II

- We believe the most cost-effective means of achieving these goals is via an 800 MeV superconducting pulsed linac, extendible to support >2 MW operations to LBNF and upgradable to continuous wave (CW) operations
  - Builds on significant existing infrastructure
  - Capitalizes on major investment in superconducting rf technologies
  - Eliminates significant operational risks inherent in existing linac
  - Siting consistent with eventual replacement of the Booster as the source of protons for injection into Main Injector
- Whitepaper available at

  projectx-docdb.fnal.gov/cgi-bin/ShowDocument?docid=1232

PIP-II Performance Goals

Performance Parameter	PIP	PIP-II	
Linac Beam Energy	400	800	MeV
Linac Beam Current	25	2	mA
Linac Beam Pulse Length	0.03	0.5	msec
Linac Pulse Repetition Rate	15	15	Hz
Linac Beam Power to Booster	4	13	kW
Linac Beam Power Capability (@>10% Duty Factor)	4	~200	kW
Mu2e Upgrade Potential (800 MeV)	NA	>100	kW
Booster Protons per Pulse	4.2×10^{12}	6.4×10^{12}	
Booster Pulse Repetition Rate	15	15	Hz
Booster Beam Power @ 8 GeV	80	120	kW
Beam Power to 8 GeV Program (max)	32	40	kW
Main Injector Protons per Pulse	4.9×10^{13}	7.5×10^{13}	
Main Injector Cycle Time @ 120 GeV	1.33	1.2	sec
LBNF Beam Power @ 120 GeV*	0.7	1.2	MW
LBNF Upgrade Potential @ 60-120 GeV	NA	>2	MW

*LBNF beam power can be maintained to ~80 GeV, then scales with energy

PIP-II Site Layout (provisional)

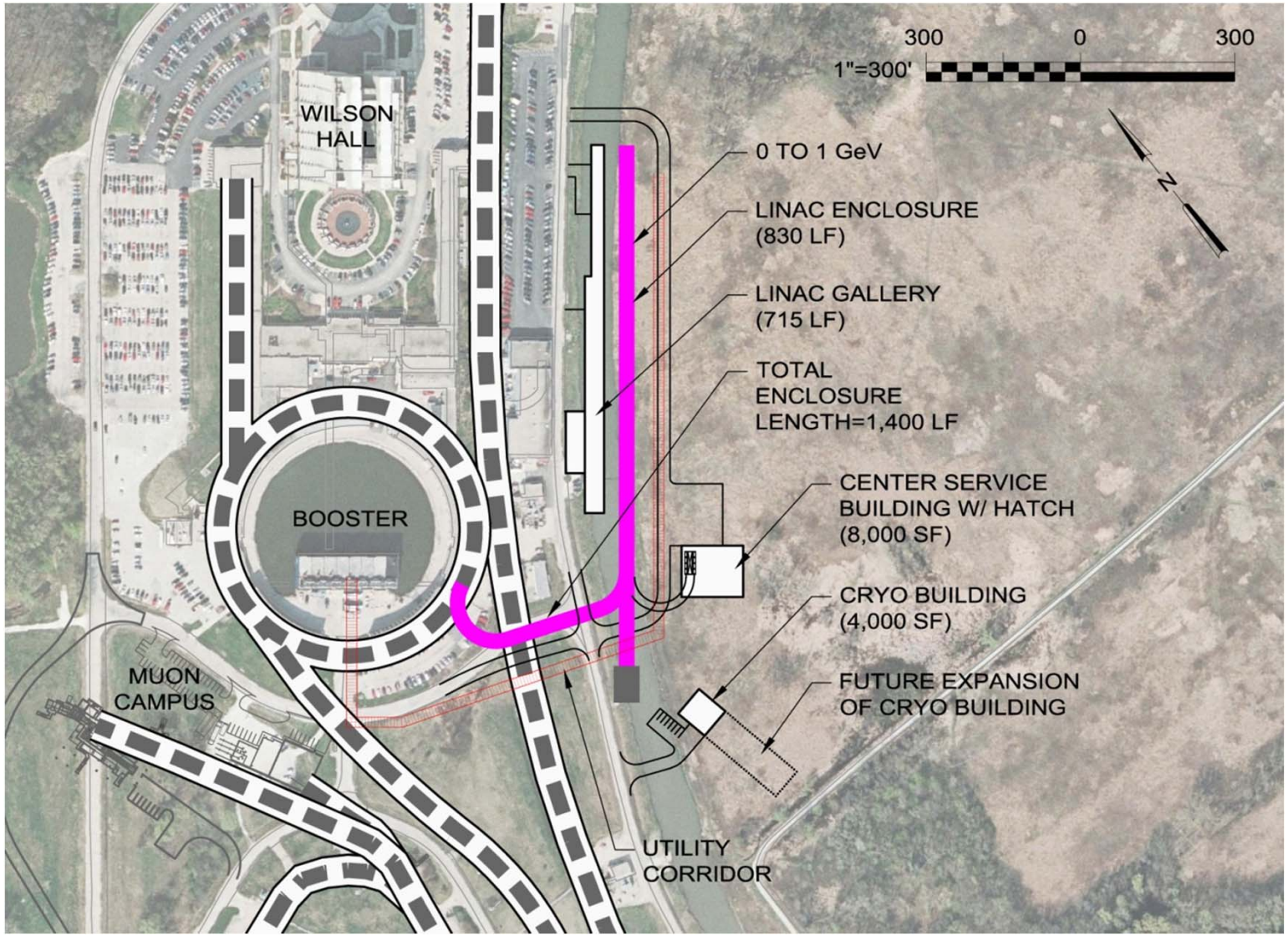

PIP-II Status and Strategy

- PIP-II is currently pre-CD-0
  - Complete concept exists
    - Documented in whitepaper; technical backup in PX RDR
  - R&D program underway
    - Front end (PXIE) and superconducting rf development
- Strong endorsement from P5
  - Recommendation 14: Upgrade the Fermilab proton accelerator complex to produce higher intensity beams. R&D for the Proton Improvement Plan II (PIP-II) should proceed immediately, followed by construction, to provide proton beams of >1 MW by the time of first operation of the new long-baseline neutrino facility.
    - Applies in all budget scenarios considered.
- Discussions with P5, Fermilab, and DOE/OHEP management have been in context of FY19 construction start
  - Consistent R&D deliverables list established
  - Preliminary discussions on potential international in-kind contributions
  - Aligned with LCLS-II and LBNF activities
- Goals for the next year
  - Release PIP-II specific RDR
  - Maintain PXIE and SRF development on established schedules
  - Support DOE in the development of Mission Need Statement
  - Establish PIP-II Office, within Accelerator Division

PXIE @ CMTF

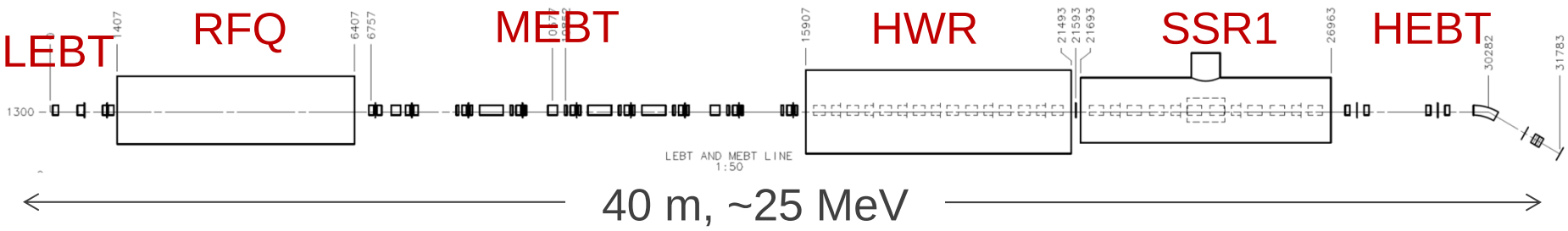

PXIE will address the address/measure the following:

- LEBT pre-chopping
- Vacuum management in the LEBT/RFQ region
- Validation of chopper performance
- Bunch extinction
- MEBT beam absorber
- MEBT vacuum management
- Operation of HWR in close proximity to 10 kW absorber
- Operation of SSR with beam, including resonance control
- Emittance preservation and beam halo formation through the front end

PXIE

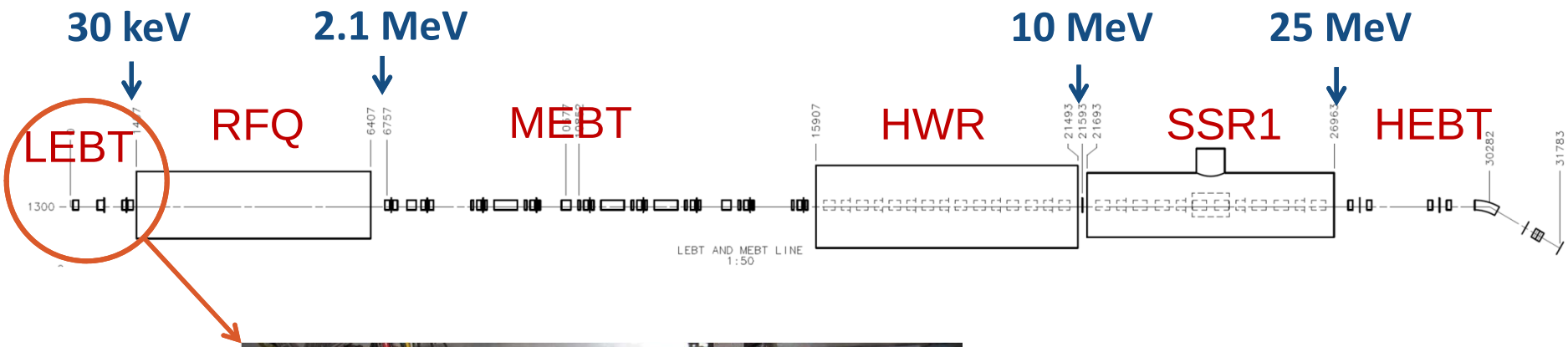

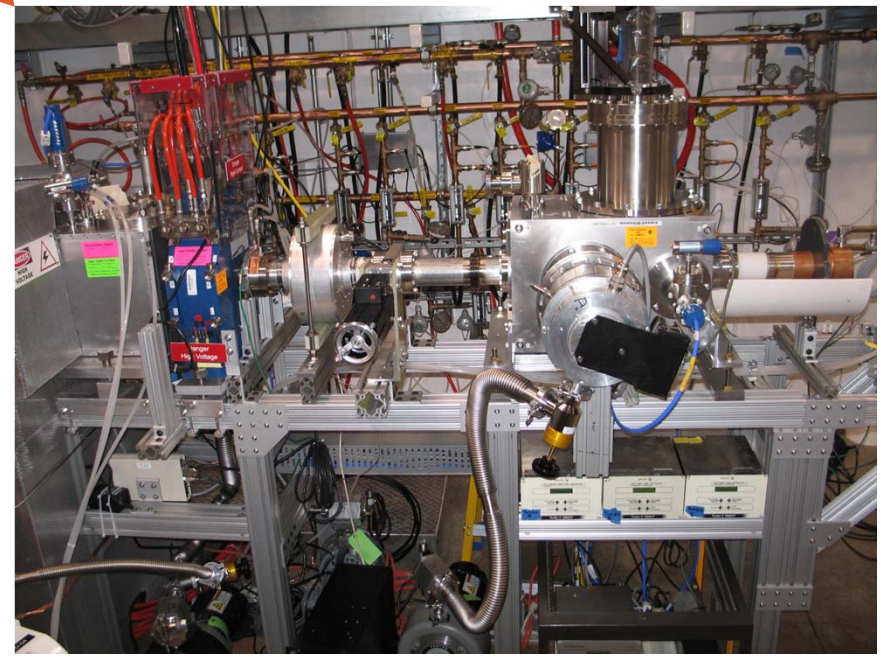

Collaborators
- ANL: HWR
- LBNL:LEBT, RFQ
- SNS: LEBT
- India (BARC): MEBT

SRF R&D

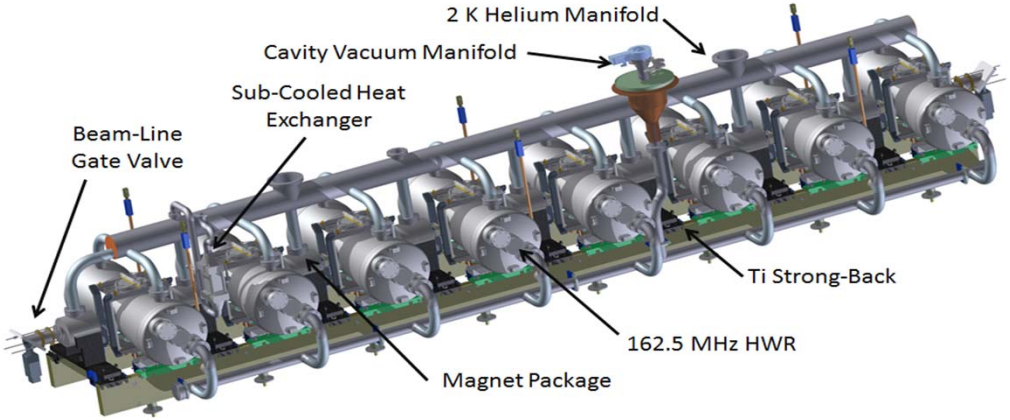

HWR

SSR1

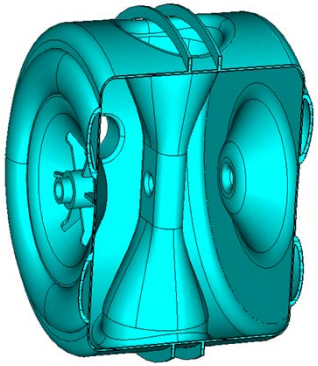

SSR2

LB650

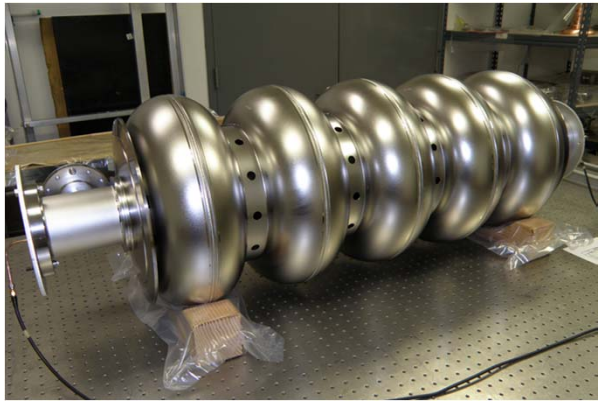

HB650

SRF Development Status

Cavity	Frequency	Cavity Type	Beta	Collaboration?	Cavity EM Design Complete	Cavity Mech Design Complete	Single Cell / Prototype Ordered	Full Cavity Prototype Received	Prototype Tested	Cavities for CM Ordered	Cavities for CM Received	Cavities for CM Tested	Cavities for CM Dressed	CM Cold Mass Design	CM Parts Ordered	# of CM Assembled	Est % complete
Half Wave Resonator (HWR)	162.5 MHz	1-HWR CW	0.11	ANL	yes	yes	yes	yes	not started	8	all parts	not started	not started	yes	WIP	not started	40
Single Spoke Resonator 1 (SSR1)	325 MHz	1-spoke CW	0.22	India	yes	yes	2	2	2	10	10	9	1	80%	WIP	not started	50
Single Spoke Resonator 2 (SSR2)	325 MHz	1-spoke CW	0.42	India	yes	yes	not started	not started	not started	not started	not started	not started	not started	not started	not started	not started	10
Low Energy 650 (LE 650)	650 MHz	5-cell CW	0.6	India, JLAB	yes	yes	2	not started	not started	not started	not started	not started	not started	not started	not started	not started	10
High Energy 650 (HE 650)	650 MHz	5-cell CW	0.9	India	yes	yes	5 of 10	4	not started	9	4	not started	not started	WIP	not started	not started	20

SRF R&D: Q0

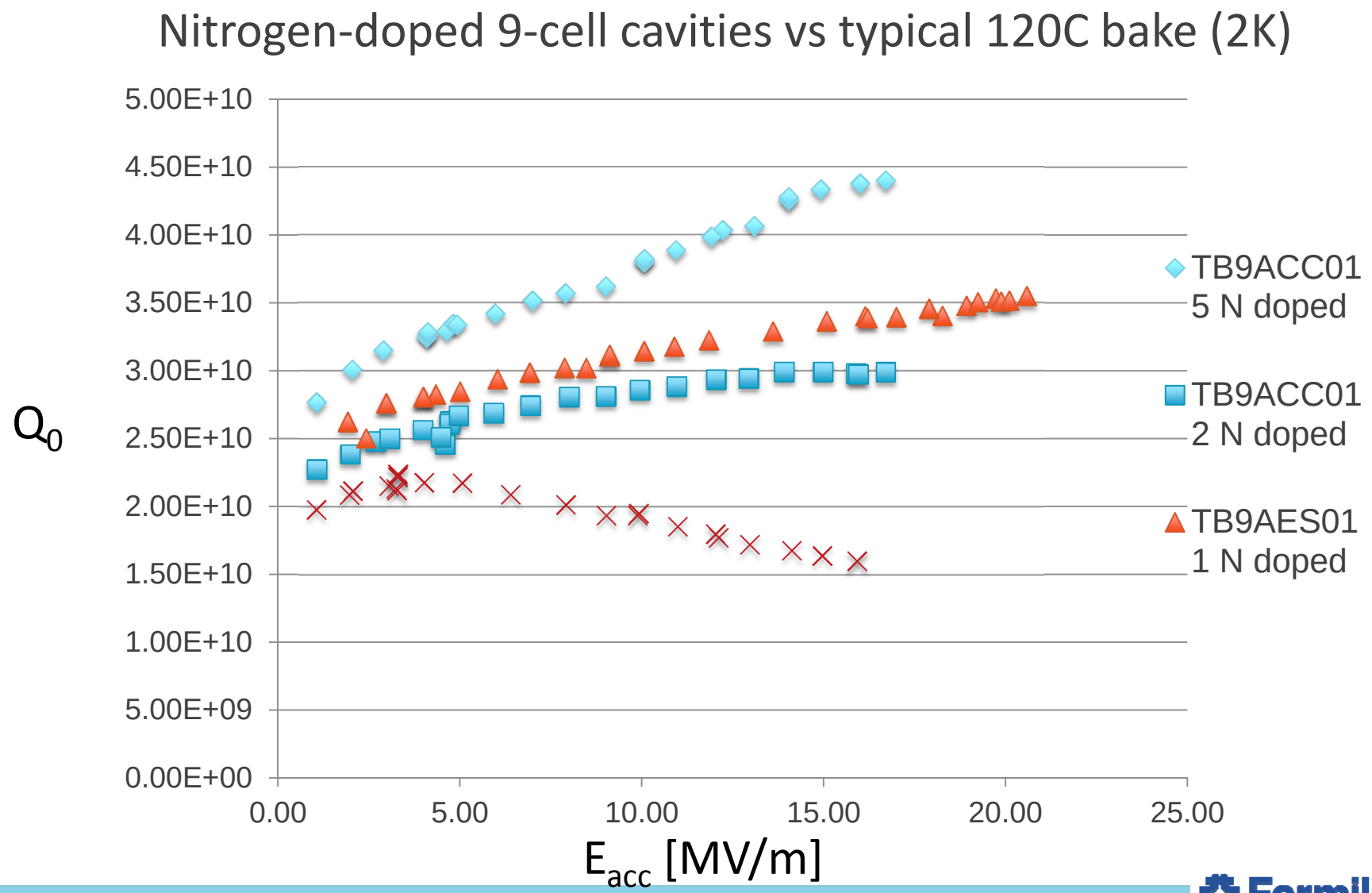
Nitrogen-doped 9-cell cavities vs typical 120C bake (2K)
5.00E+10
4.50E+10
4.00E+10
3.50E+10
3.00E+10
2.50E+10
2.00E+10
1.50E+10
1.00E+10
5.00E+09
0.00E+00
Q_0
0.00
5.00
10.00
15.00
20.00
25.00
E_{acc} [MV/m]
TB9ACC01
5 N doped
TB9ACC01
2 N doped
TB9AES01
1 N doped

PIP-II Collaboration

- Collaboration MOUs for the RD&D phase (through CD-2) :

National		IIFC
ANL	ORNL/SNS	BARC/Mumbai
BNL	PNNL	IUAC/Delhi
Cornell	UTenn	RRCAT/Indore
Fermilab	TJNAF	VECC/Kolkata
LBNL	SLAC	
MSU	ILC/ART	
NCSU		

- Ongoing collaboration/contacts with RAL/FETS (UK), ESS (Sweden), SPL (CERN), RISP (Korea), China/ADS
- Annual Collaboration Meeting (June 3-4 at Fermilab)

  https://indico.fnal.gov/conferenceDisplay.py?confId=8365

PIP-II International Contributions

- Discussions at agency and laboratory levels indicate that an 800 MeV SC linac could attract significant in-kind contributions from India/Europe/Asia
  - SC accelerating structures
  - RF sources
  - Instrumentation
  - Magnets/power supplies
- Significant R&D collaboration for >5 years with India
  - Discussions at DOE-DAE level on potential Indian in-kind contributions

Flexible Platform for the Future

- PIP-II Inherent Capability
  - ~200 kW @ 800 MeV
  - ×10 Mu2e sensitivity
- 2 MW to LBNE
- Flexibility for future experiments
  - Muons, Kaons @100's kW
- Compatible with muon acceleration needs (Mark P talk)

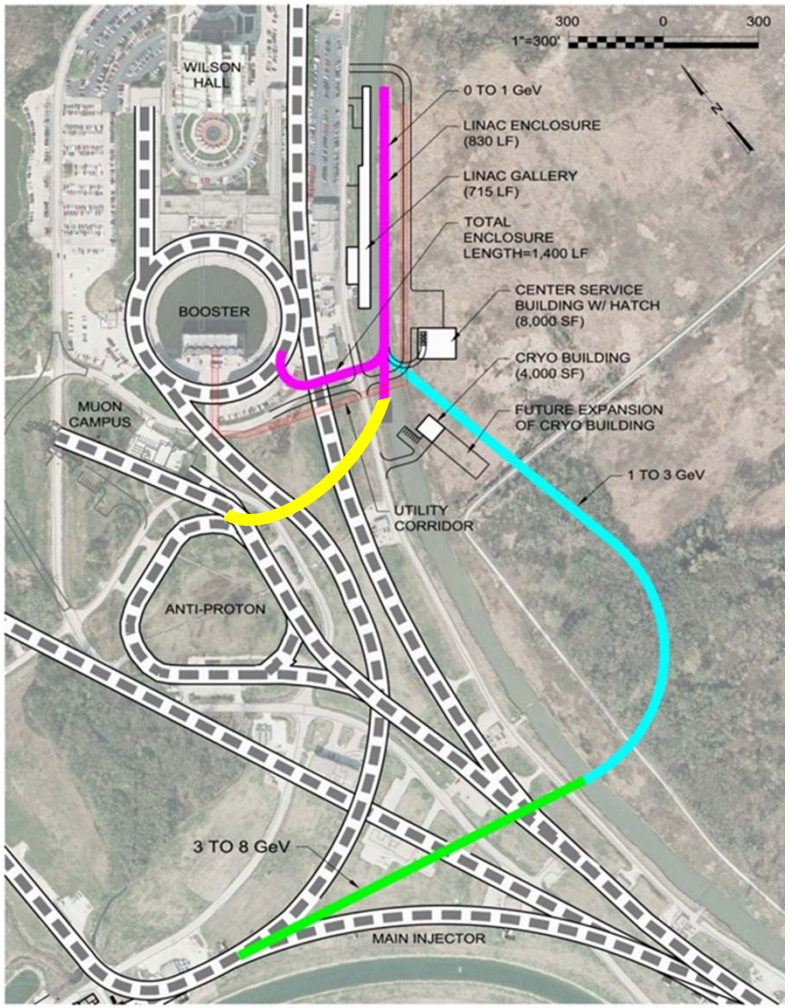

Summary (@P5)

- The Fermilab accelerator complex can be upgraded to establish LBNE as the leading long-baseline program in the world, with >1 MW at startup (2025)
- The Proton Improvement Plan-II (PIP-II) is a complete, integrated, cost effective concept, that meets this goal, while
  - leveraging U.S. superconducting rf investment,
  - attracting international partners,
  - providing a platform for the long-term future
- PIP-II retains flexibility to eventually realize the full potential of the Fermilab complex
  - LBNE >2 MW
  - Mu2e sensitivity x10
  - MW-class, high duty factor beams for rare processes experiments
- We look forward to a positive recommendation from P5, and are in a position to move forward expeditiously.
- We have received a positive recommendation from P5 and are working with Fermilab and OHEP management to move forward.

Backup Slides

PIP-II Linac Technology Map

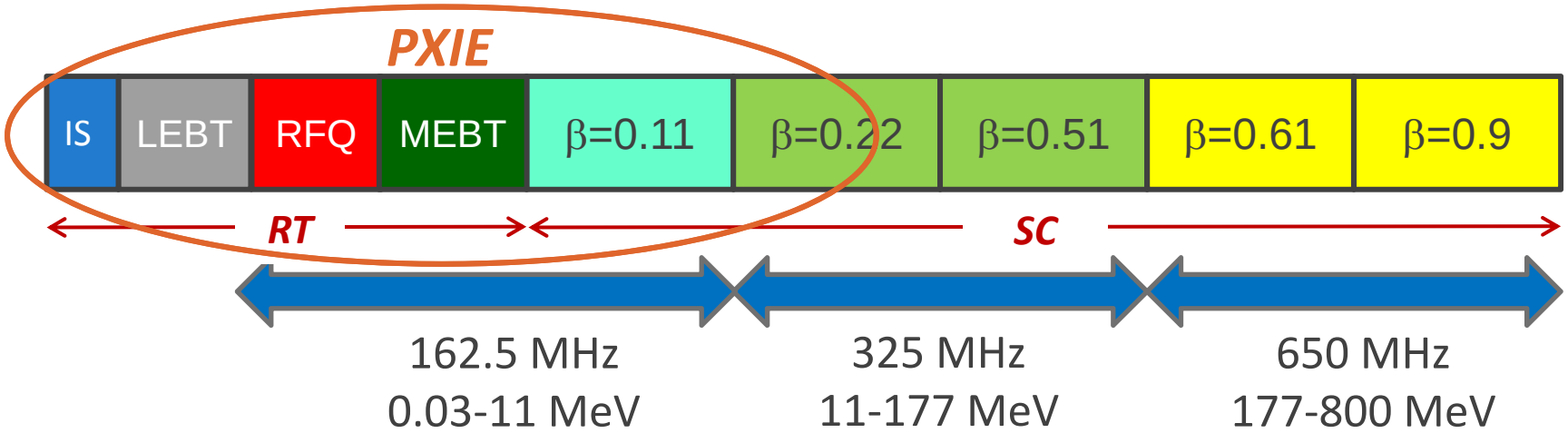

Section	Freq	Energy (MeV)	Cav/mag/CM	Type
RFQ	162.5	0.03-2.1		
HWR (β_{opt}=0.11)	162.5	2.1-11	8/8/1	HWR, solenoid
SSR1 (β_{opt}=0.22)	325	11-38	16/8/ 2	SSR, solenoid
SSR2 (β_{opt}=0.51)	325	38-177	35/21/7	SSR, solenoid
LB 650 (β_G=0.61)	650	177-480	30/20/5	5-cell elliptical, doublet
HB 650 (β_G=0.9)	650	480-800	24/10/4	5-cell elliptical, doublet

Proton Demand

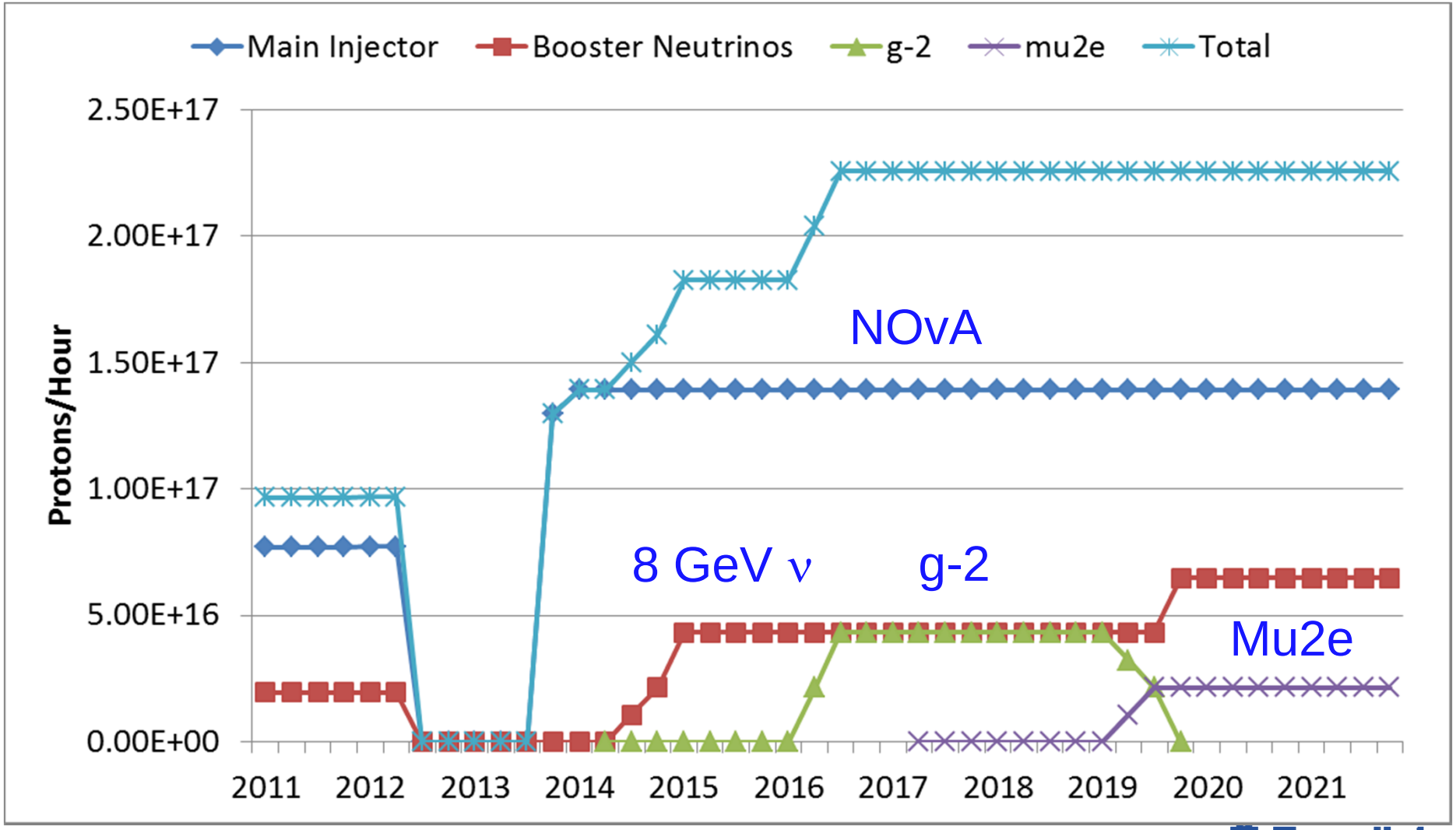

Cryogenic System

- Required to support 5% cryogenic duty factor
  - Configuration capable of 10-15% with more pumping
  - 160 – 240 kW beam power at 800 MeV

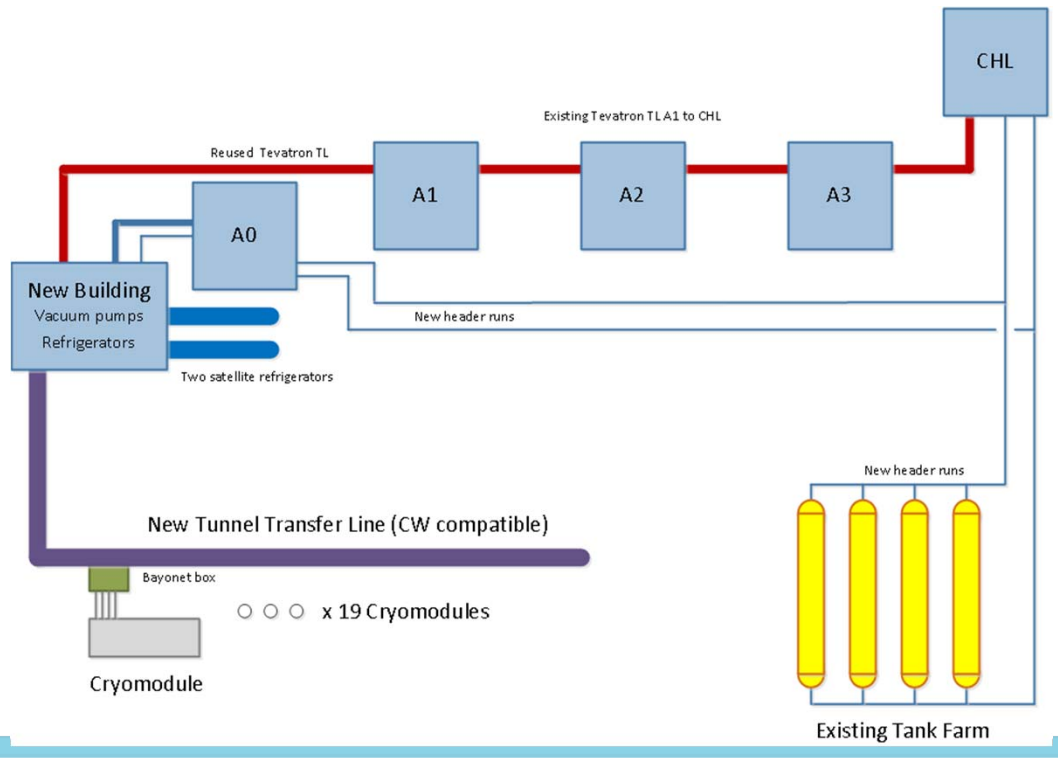

Proton Improvement Plan-II
Cost Estimate

PIP-II Major Cost Component	Estimate ($M)
R&D	$27
Project Management	$26
Accelerating Cavities and Cryomodules	$70
RF Sources	$29
Cryogenic Systems (reuse existing CHL)	$14
Civil Construction	$66
Instrumentation	$12
Controls	$13
Mechanical Systems	$3
Electrical Systems	$2
Beam Transport	$5
Sub-total (direct, FY2013 dollars)	$266
Indirects, Contingency (40%), escalation (18%)	$276
TOTAL PROJECT COST (FY2020 Dollars)	**$542**